SPECIFICATION OF ROBOT

YS002NDE91

3rd Edition : Aug.6.2014

KAWASAKI HEAVY INDUSTRIES LTD.
ROBOT DIV.

Doc,No:90101-2100DEC

Materials and specifications are subject to change without notice.

1. Specification of Robot

[1] Robot Arm

1. Model	YS002N-C
2. Type	Delta Parallel Robot
3. Degree of freedom	4 axes
4. Axis specification	

Operating axis		Max. operating range	Max. speed
Arm rotation 1	(JT1)	+77 ° ～－34.5 °	490 °/s
Arm rotation 2	(JT2)	+77 ° ～－34.5 °	490 °/s
Arm rotation 3	(JT3)	+77 ° ～－34.5 °	490 °/s
Wrist twist	(JT4)	+360 ° ～－360 °	1714.3 °/s

5. Palletizing Capacity (Maximum)	Approx. 200 pieces/min (0.5kg weight, only robot arm) Approx. 166 pieces/min (2kg weight, only robot arm) On the condition that robot moves 25 mm stroke in up-down direction and 305 mm stroke in right-left direction. *1 Excluding picking up and placing time *2 With a limit in contiunuous operations
6. Position Repeatability	±0.04mm
7. Angular Repeatability	±0.10°
8. Max. payload	2kg
9. Max. liner speed	3300mm/sec
10. Load capacity of wrist	

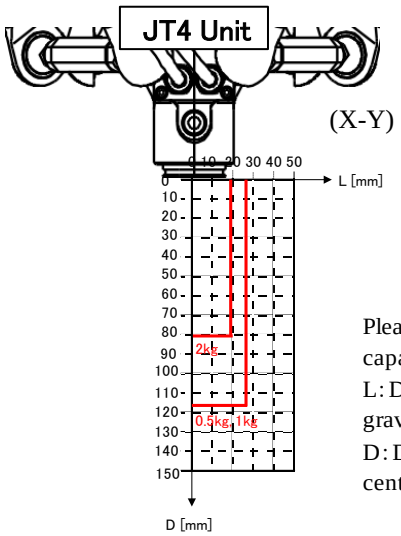

(Z)

load [-]	Max Torque [Nm]	Max Moment [Nm]
0.5kg	0.13	0.57
1kg	0.25	1.15
2kg	0.37	1.57

Please put the center of mass inside of the line of the each load capacity.
L: Distance in X-Y dimension from Z-axis to the mass center of gravity of the load.
D: Distance in Z dimension from X-Y dimension to the mass center of gravity of the load.

11. Driving motor	Brushless AC Servomotor
12. Working range	See attached drawing
13. Mass	60 kg (without options)
14. Color	Munsell 10GY9/1 equivalent
15. Installation	Ceiling mounting
16. Environment cond.	(Temperature) 0 ～ 40 °C, (Relative Humidity) 35 ～ 85 % (non-condensation)
17. Degree of Protection	IP65 equivalent
18. Built-in utilities	none
19. Options	
20. Others	Consult Kawasaki about maintenance parts and spare parts.

[2] Controller			
1. Model		E91	
2. Enclosure		Enclosed structure / Indirect cooling system	
3. Dimensions		See attached drawing	
4. Number of controlled axes		Max.6 axes	
5. Servo control and drive system		Full Digital Servo System	
6. Type of control		Teach mode	Joint, Base, Tool, Fixed Tool (option) operation mode
		Repeat mode	PTP, CP control mode Joint, Linear, Circular (option) interpolation
7. Teaching method		Teaching or AS language programming	
8. Memory capacity		8 MB	
9. External operation signals		External Motor Power Off, External Hold, etc.	
10. General purpose signals		Input signals	32 channels (Includes dedicated signals)
		Output signals	32 channels (Includes dedicated signals)
11. Operation panel		FastCheck/Teach/Repeat SW, Emergency Stop SW, Control power lamp	
12. Cable length		Power/Signal cable	10 m
		Teach Pendant cable	10 m
13. Mass		See attached drawing	
14. Power requirement		AC200 V - AC230 V±10%, 50/60 Hz, 1 phase, Max. 4 kVA	
15. Ground		Less than 100 Ω (robot dedicated ground) Leakage current: max. 100 mA	
16. Ambient temperature		0 - 40℃	
17. Relative humidity		35 - 85 % (non-condensation)	
18. Surface Treatment		Munsell: 10GY9/1	
19. Teach Pendant		TFT color display (5.7 inch LCD) with touch panel Emergency Stop SW, Teach Lock SW and Enable SW	
20. Safety Circuit		Category: 3, Performance Level: d (EN ISO13849-1: 2008) ★	
21. Options			
	General purpose signals	Input signals	64/96 channels
		Output signals	64/96 channels
	I/O connector	D-SUB 37pin(male,female) with cover	
	Power/Signal cable	5m, 15m	
	Teach Pendant cable	5m, 15m	
	Motor brake release	Manual brake release switch BOX	
	Auxiliary storage	USB memory	
	PC cable	1.5 m, 3 m	
	Teach Pendant option	Connector for TP less	
	Others	Field BUS, Software PLC, Analog input/output, Conveyor Synchronization, Vision and so on	
22. Others		Consult Kawasaki about maintenance parts and spare parts.	

★ Category and Performance level (PL) are determined by the whole system and conditions.
The safety circuit of this controller is available in the system of category: up to 3, PL: up to d.

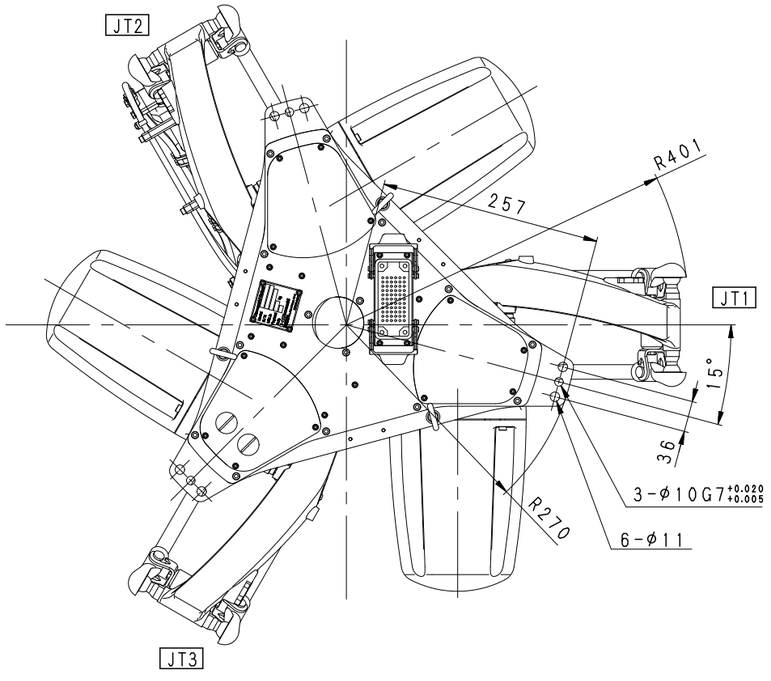

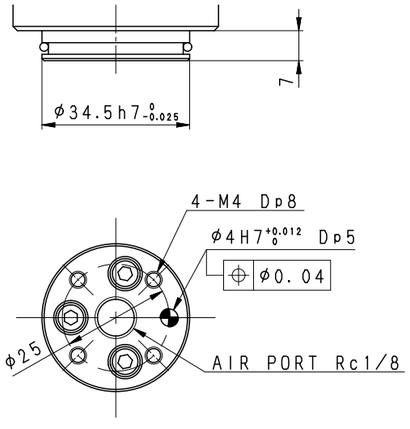

VIEW A

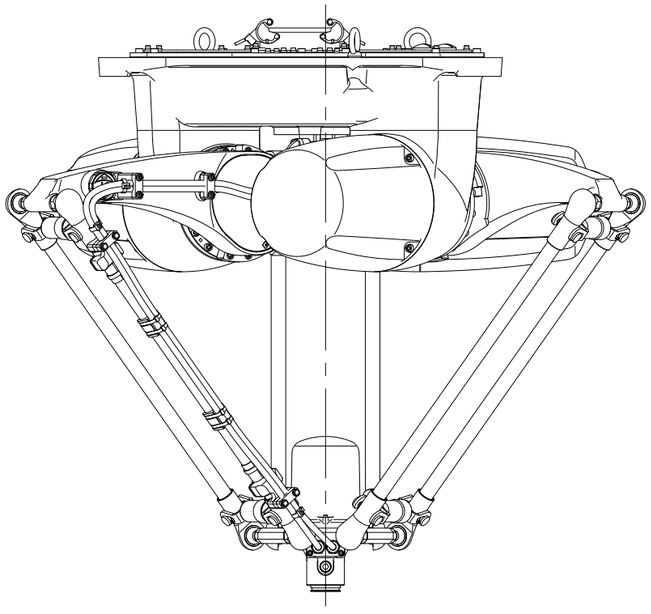

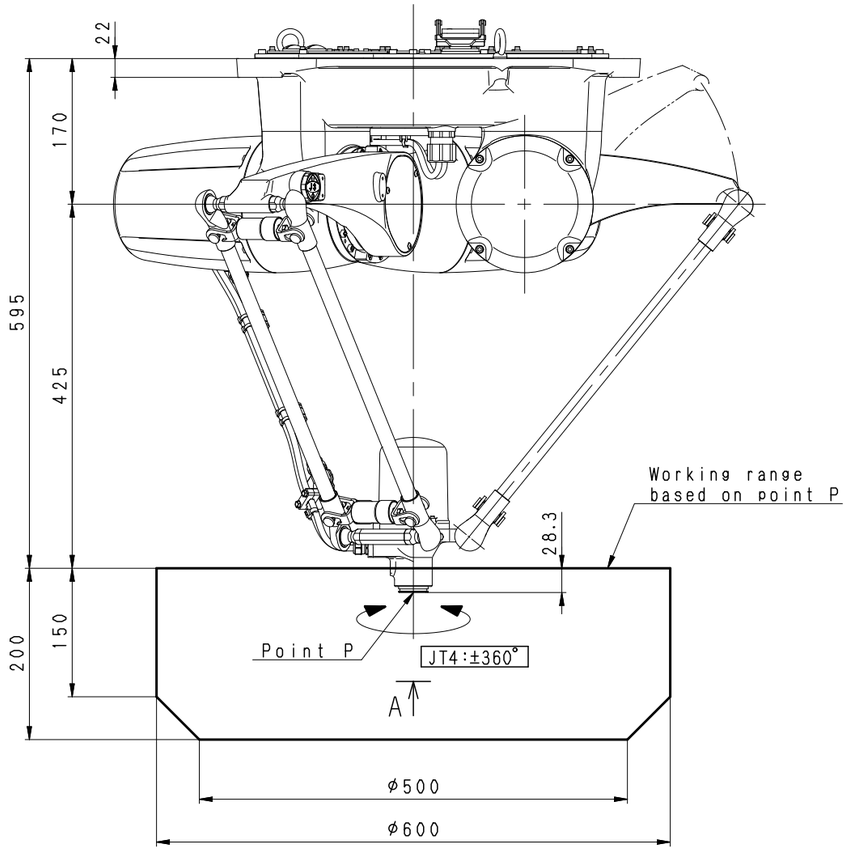

YS002N-C

WORKING RANGE

E91 CONTROLLER

MASS：40Kg

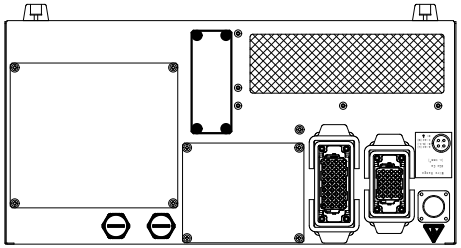

REAR VIEW

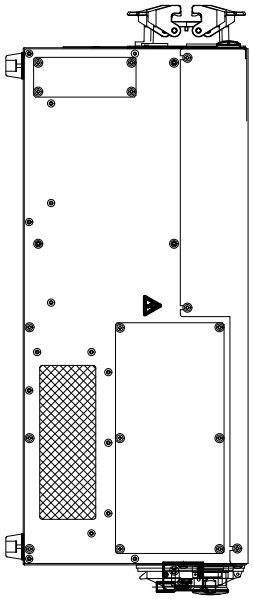

SIDE VIEW

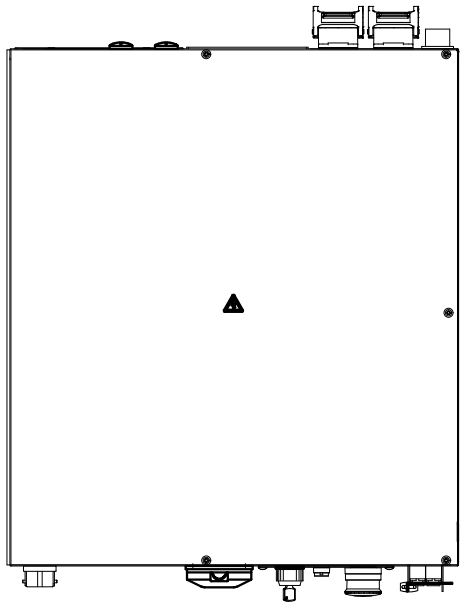

TOP VIEW

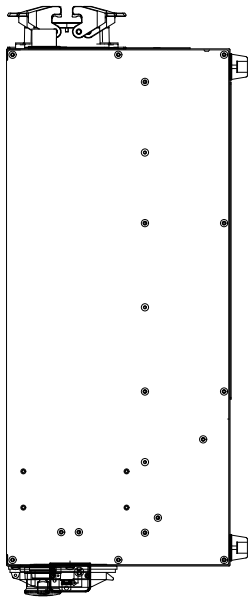

SIDE VIEW

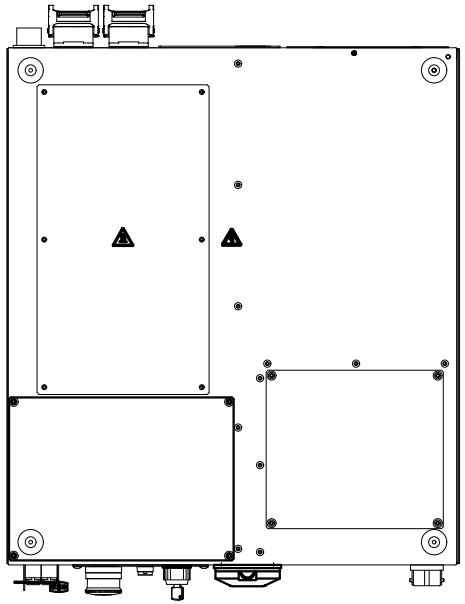

BOTTOM VIEW

(50)

580

(34)

Vertical Mount
縦置の場合

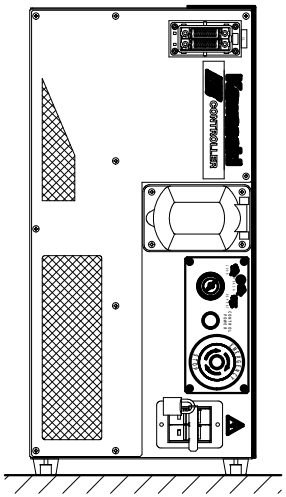

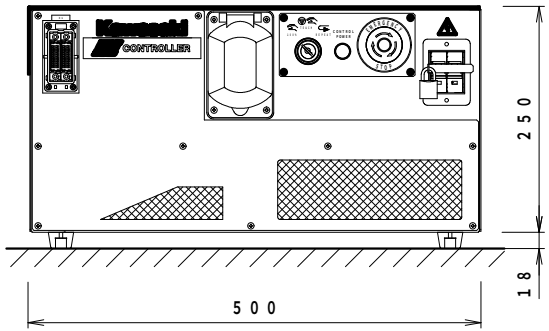

250

18

500
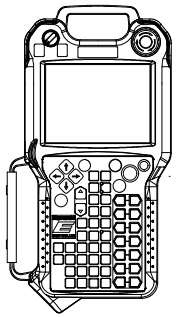
FRONT VIEW